Uni-Rail fixing configuration

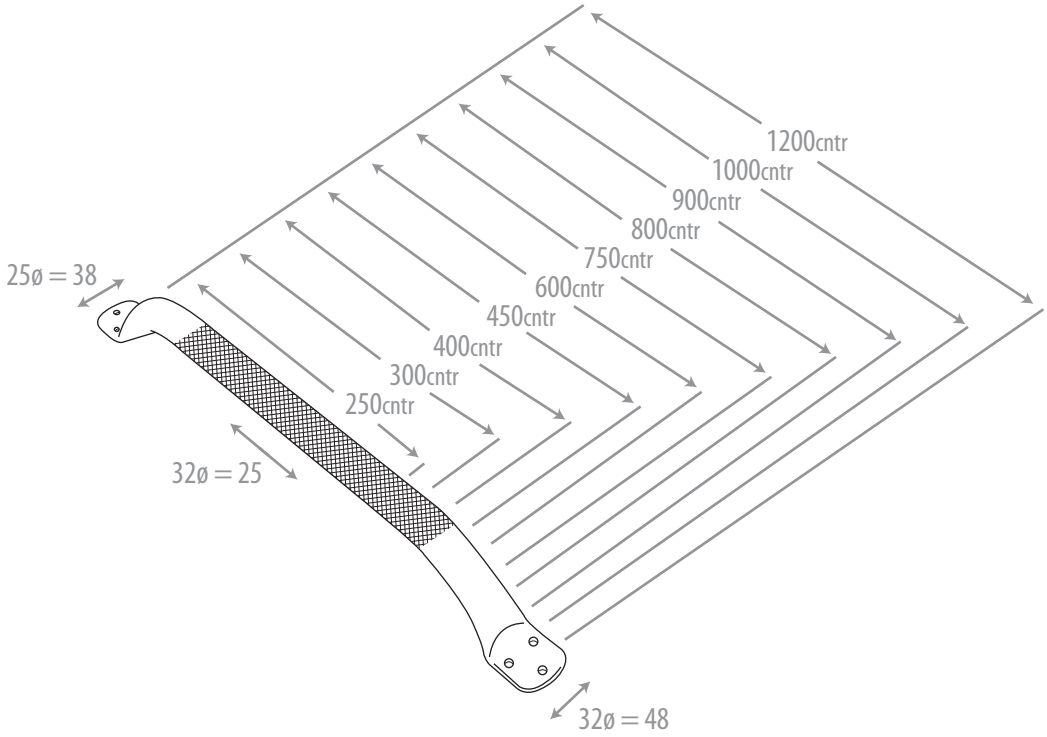

Tap Rail fixing configuration

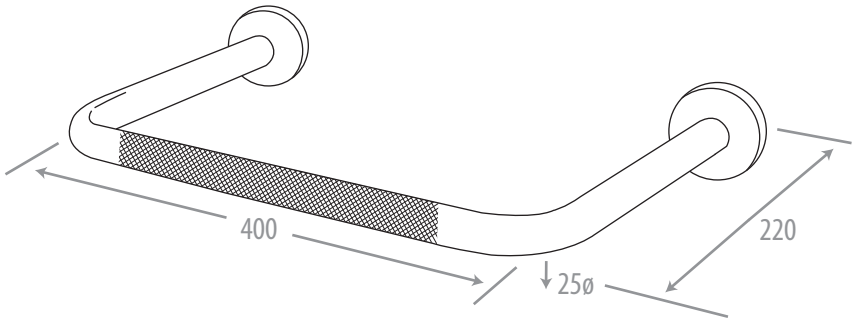

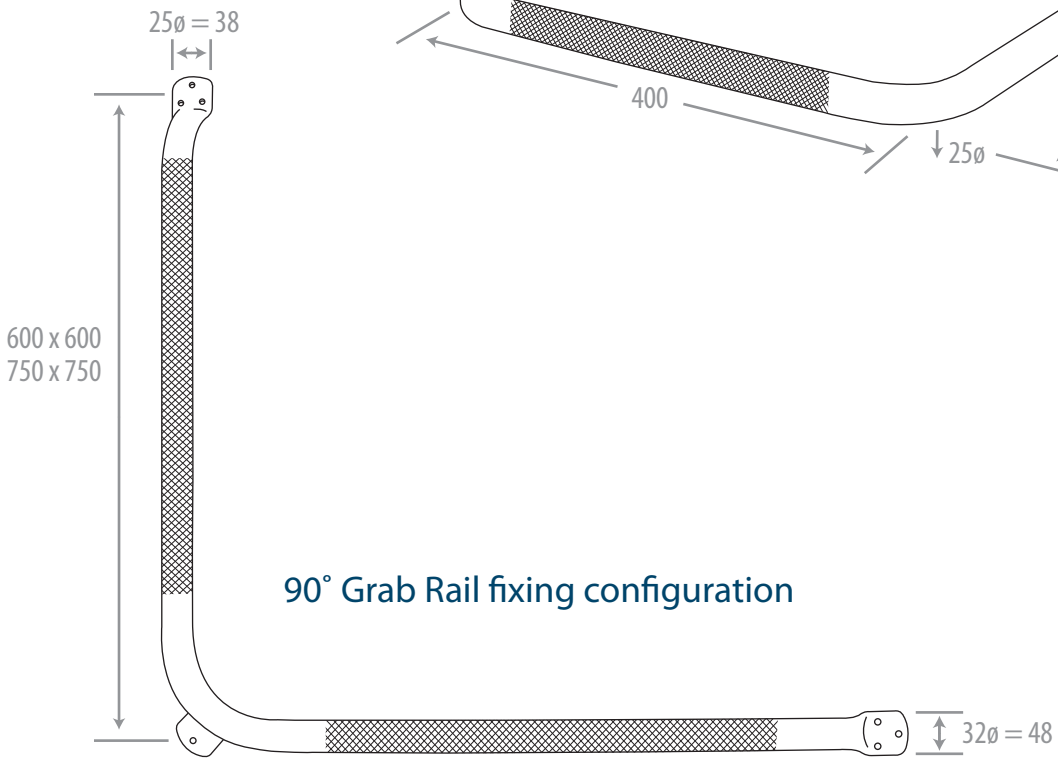

90˚ Grab Rail fixing configuration